mylyr®

EIB/KNX Power supply specification

Model:

MLR–PS–960

KNX/EIB Residential and building smart control system

Overview

The EIB/KNX power supply is used to provide and monitor the voltage of the EIB/KNX system, the output has two connection terminals, one is used for EIB bus power supply and signal transmission, one for auxiliary power suppl. It can provide a power supply voltage of 30V DC to the terminal equipment. The bus connector has integrated a reactor inside the power supply. If the auxiliary power supply terminal is connected to an external reactor, it can also be used as the bus power supply terminal, which also has the function of signal transmission.

EIB / KNX power supply is modular installation equipment and can be mounted on 35mm d–rails for easy installation into the distribution box according to EN 60 715 design. The equipment adopts screw terminal to realize electrical connection, bus connections are directly connected through EIB terminals (red/black), the auxiliary power supply is directly connected through the EIB wiring terminal (yellow/white), the input is connected to the 230V AC supply. Pressing the reset button to reset power on the device for 22S (22S does not include the time of button action). When the bus power supply fails, all other devices connected to the bus return to their original state. When the bus is disconnected for a long time, remove the bus power supply from the power.

Specification

Input voltage	100–240V AC (50•60Hz)
Output voltage	30V DC(2–way: 1–way signal bus, 1–way auxiliary power supply)
Output current	2–way total <=960mA
Channel Qty	2 channels
Working temperature	–5℃ ~ +45℃
Working humidity	10%~95% , no–condensation
Installation	Standard 35mm DIN rail

Dimension

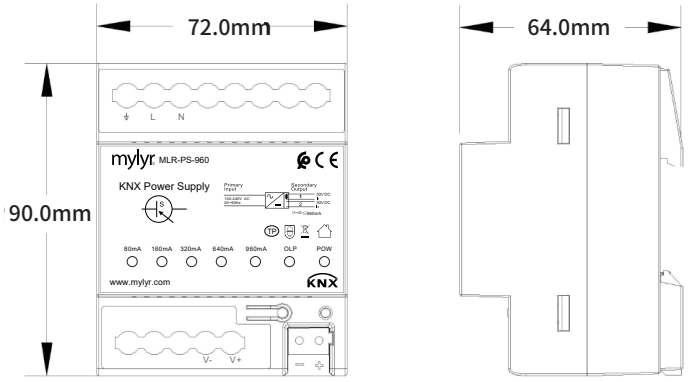

Model	Size	Weight
MLR–PS–960	90 × 72 × 64mm	0.21kg

Wiring diagram

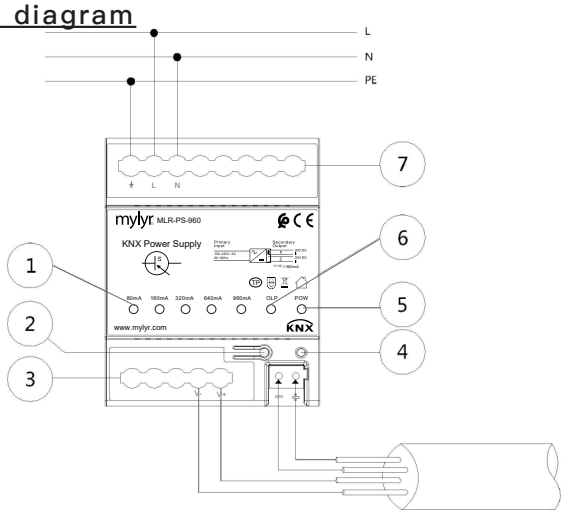

Instruction

① Current output indicator
② Reset button
③ EIB power supply output
④ Reset indicator
⑤ Power indicator
⑥ Over current protection lamp
⑦ Power input connection terminal 220V

Installation

For quick installation into distribution boxes or small boxes, the equipment is designed for modular installation according to the EN 60715 series and can be mounted on 35mm ding rails. During installation, ensure that the equipment is operated, tested, inspected, maintained and repaired correctly

Operation test

After the bus power supply is correctly installed, turn on the main power supply and start to supply power. At this time, the green light on the device is on and other lights are off, indicating that the bus power supply can run normally.

Important tips

Installation and debug of equipment should only be performed by qualified and skilled electricians. All standards, instructions, rules and instructions related to the planning and implementation of electrical installation shall be strictly followed

● Avoid moisture, dirt, and damage during transportation, storage, and use

● Do not operate the device outside the specified technical specifications (e.g. temperature range)

●Devices should only be operated in an enclosed environment (e.g. distribution box)

If the device is dirty, use a dry cloth to clean it. If that's not enough, use a damp cloth with a little soapy water to wipe gently. Never use alkali or corrosive solvents