HS1 KNX Home Server User Manual

HS1

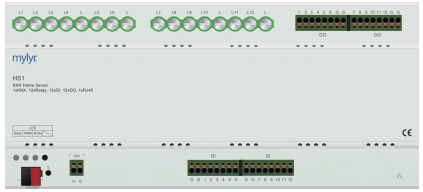

1

Safety instructions

- Before installation, please read user manual carefully and observe relevant standards, directives, regulations and instructions.
- Electrical equipment must be installed and programmed by qualified technicians only.
- This device is manufactured according to the relevant technical specifications and have CE.
- For more information of this product, please contact the technical engineer of manufacturer.
- Users are not permitted to alter and maintain the product without the authorization of manufacturer.
- Failure to observe the instructions may cause damage to the device and result in fire or other hazards.

Product Overview

The HS1 KNX Home Server integrates the home server solution with a variety of control modules, including relay outputs and DI/DO ports, as well as TCP/IP connectivity, making it ideal for applications such as hotel guest rooms, small apartments and conference rooms. Through the hardware interfaces of the home server platform, it manages a wide range of connected devices. By combining control modules and a multi-functional gateway into one integrated unit, it operates as a d edicated all-in-one control center.

The HS1 supports DIN-rail mounting, features abundant hardware interfaces and delivers powerful computing performance. It supports a wide range of communication protocols, including KNX, TCP/IP, UDP, BACnet/IP, Modbus TCP, and more. It can be further upgraded and customized to meet actual application requirements, providing a truly intelligent overall solution.

2

Product Features

- DIN 35mm standard rail-mounted modular unit, featuring a compact structure and high-performance functionality.
- No programming required: Ready for use with factory default settings; settings can also be modified and reprogrammed as needed.
- Relay Outputs: Equipped with 12 channels of 10A relays, ideal for high-power loads including room card power switches, main control switches, and sockets.
- DI Inputs: Features 12 channels of passive dry contact inputs, designed to receive signals from dry contact control panels.
- DO Outputs: 12-channel DC 0–24V output, with a single-channel output current not exceeding 100mA, designed for passive or low-voltage control applications.
- RJ45: Equipped with one RJ45 port that supports a wide range of network control functions and protocols, including local/remote APP control, cloud-based voice control, TCP/IP, Modbus TCP, and BACnet/IP. Multiple functions can be used simultaneously.
- KNX: Equipped with one KNX TP interface. It can be integrated into a KNX system, connected with other control systems, or used independently. The system is convenient, flexible and easily expandable.
- System Integration: Supports integration with a wide range of systems via TCP/IP, including HVAC (heating, ventilation, and air conditioning), floor heating, ventilation, background music, home theater, conference systems, central control, security systems, and building management systems.
- Built-in Logic/Timer Functions.
- Supports Remote Debugging and Configuration.
- Built-in KNX IP Router Function: Equipped with an integrated filtering table.
- Cross-Platform Support: Works seamlessly with iOS, Android, Windows and other major operating systems.

3

Product Configuration

1)This product adopts the web page programming method. Please use browsers that are not based on the IE kernel for function configuration, such as Firefox, Chrome, etc.
2)Login address: 192.168.1.232
3)Username: admin
4)Password: 123

Product Wiring

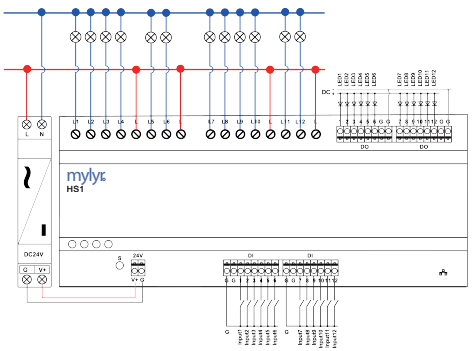

4

Product parameters

Parameter / Types	HS1
Product Info	
Dimension(WxHxT)	216mm×92.5mm×60mm
Power Supply	24V DC
Type of protection	IP20
Operation	0℃~70℃
Storage	-25℃~70℃
Installation method	Rail-mounted installation
Product port	
10A relay output	12
Digital Input	12
Digital Output	12
Polarity	Common Anode
Output voltage	Passive / 5V / 12V / 24V
RJ45	1
KNX TP	1
LED indicator light	
BUS	KNX system indicator light, red
POWER	Working indicator light, orange
RUN	Operating indicator light, green

5

Product dimensions

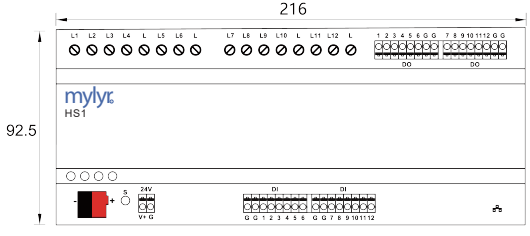

6

Operating instructions

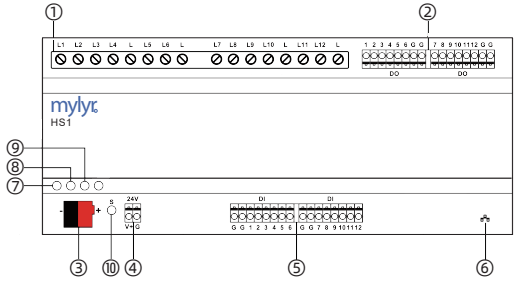

7

Operating instructions

1) 10A Relay Outputs: Terminal L serves as the common terminal for load power supply.
2) DO Signal Outputs: Supports 0/12V output; G is the common terminal.
3) KNX Bus Terminals: For connection to KNX systems.
4) Power Supply Terminals: Use a 24V DC power supply; V+ is positive (+), G is negative (-).
5) DI Signal Inputs: Passive dry contact inputs; G is the common terminal.
6) RJ45 Port: For networking and protocol integration.
7) BUS Indicator: Steady Red after the KNX system is connected.
8) PWR Indicator: Steady Orange when the power is connected.
9) RUN Indicator: Steady Green after startup is complete; flashes Green rapidly during data transmission/reception.
10) Reset Button:Short press: Toggles the master switch for all relays. Long press (6 seconds): Hold until the RUN indicator flashes rapidly and then resumes steady light. The device will then be restored to factory settings (including host IP network parameters, serial port settings, and startup mode).

8